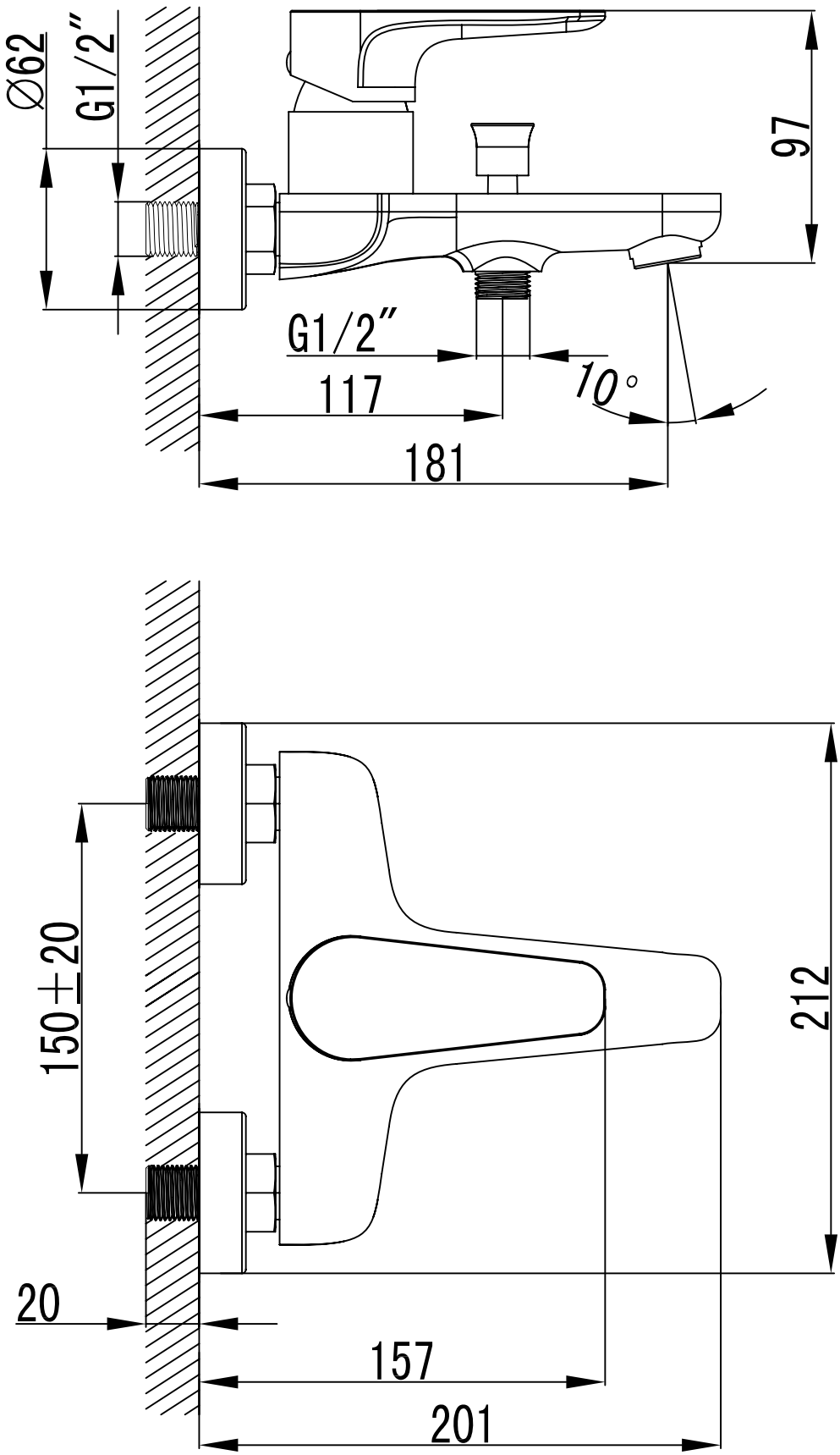
Ø62
G1/2"
97
G1/2"
117
10°
181
150±20
212
20
157
201